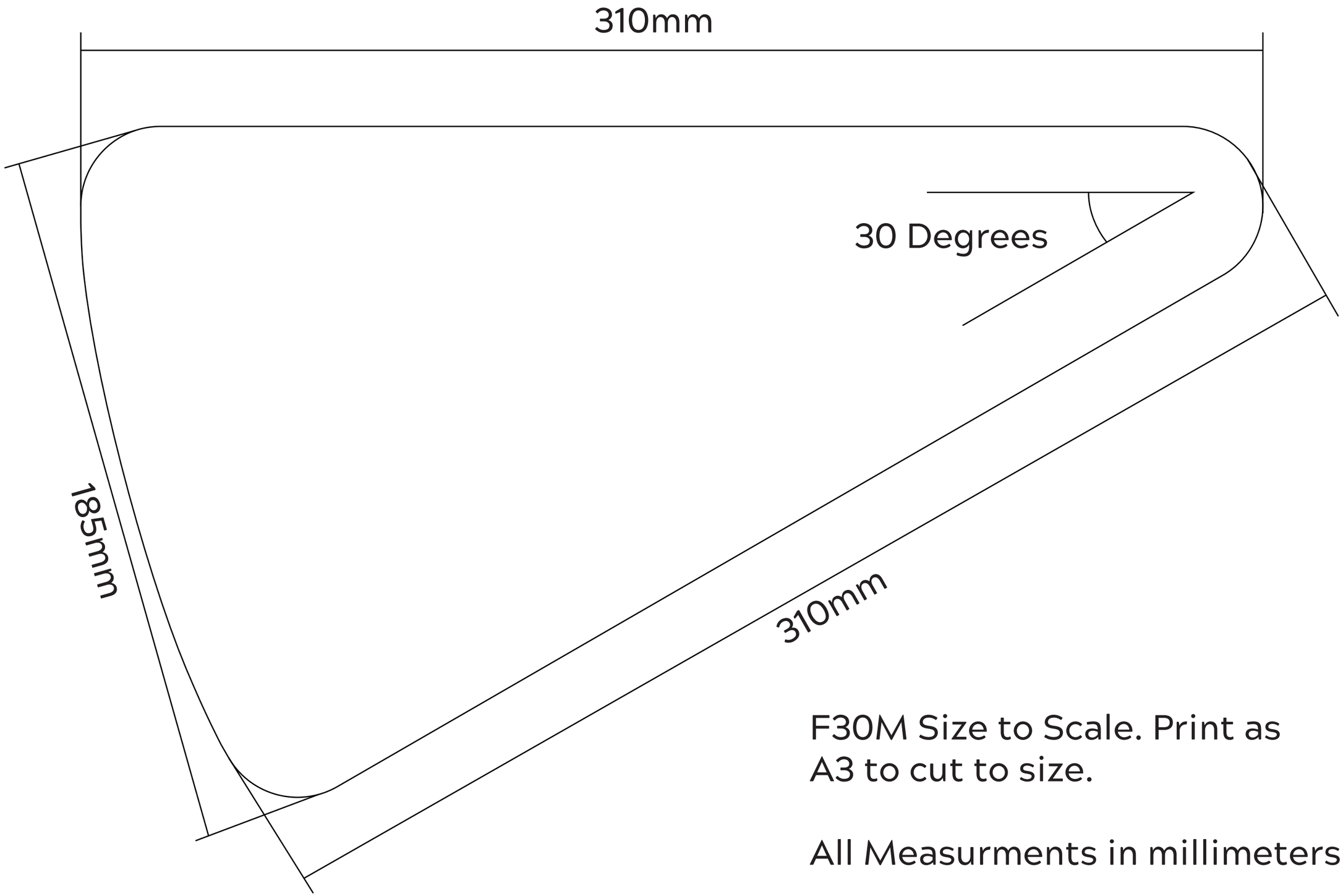

F30M Size to Scale. Print as
A3 to cut to size.

All Measurments in millimeters.